FLEXPRESS™ FP-S/300 Externally Pressurized Guided Expansion Joints

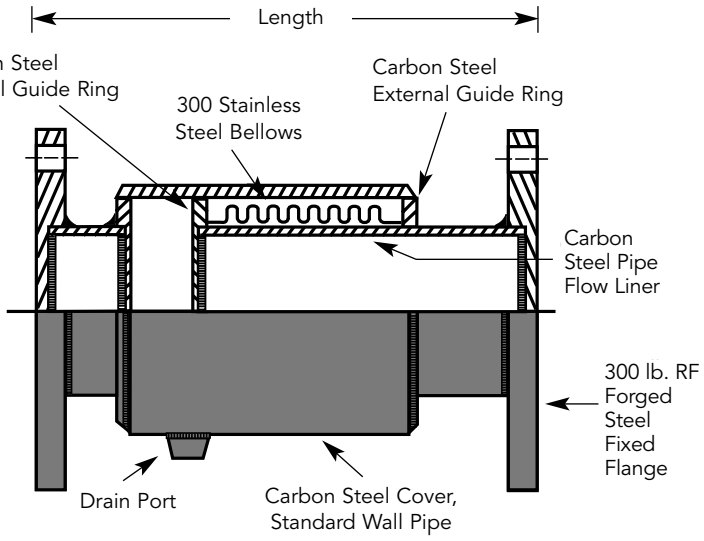

Maximum Temperature 650°F

Qty	Design Pressure 300 PSIG • Test Pressure 450 PSIG					
	I.D. (In.)	Bellows Area (Sq. In.)	Length (In.)	Movement Capabilility (In.) Compression	Movement Capabilility (In.) Extension	Weight (Lbs.)
	2.00	12	25.75 34.75 41.75	4.00 6.00 8.00	.75 1.12 1.50	49.00 63.00 72.00
	2.50	12	25.75 34.75 41.75	4.00 6.00 8.00	.75 1.12 1.50	56.00 73.00 84.00
	3.00	16	24.75 31.25 39.75	4.00 6.00 8.00	.75 1.12 1.50	75.00 87.00 106.00
	4.00	30	25.75 32.50 41.25	4.00 6.00 8.00	.75 1.12 1.50	121.00 141.00 170.00
	5.00	42	24.50 30.75 36.75	4.00 6.00 8.00	.75 1.12 1.50	158.00 181.00 203.00
	6.00	53	25.25 31.25 37.50	4.00 6.00 8.00	.75 1.12 1.50	190.00 214.00 239.00
	8.00	83	26.75 33.50 40.00	4.00 6.00 8.00	.75 1.12 1.50	295.00 336.00 377.00
	10.00	135	28.50 35.75 44.75	4.00 6.00 8.00	1.00 1.50 2.00	396.00 452.00 534.00
	12.00	182	30.50 38.25 47.75	4.00 6.00 8.00	1.00 1.50 2.00	540.00 610.00 712.00
	14.00	212	30.75 38.50 48.00	4.00 6.00 8.00	1.00 1.50 2.00	732.00 828.00 966.00
	16.00	276	31.50 39.25 48.75	4.00 6.00 8.00	1.00 1.50 2.00	798.00 905.00 1060.00
	18.00	338	31.75 39.50 49.00	4.00 6.00 8.00	1.00 1.50 2.00	1007.00 1126.00 1297.00
	20.00	404	32.00 39.75 49.25	4.00 6.00 8.00	1.00 1.50 2.00	1189.00 1319.00 1507.00
	22.00	481	32.75 40.50 50.00	4.00 6.00 8.00	1.00 1.50 2.00	1356.00 1497.00 1702.00
	24.00	562	33.00 40.75 50.25	4.00 6.00 8.00	1.00 1.50 2.00	1619.00 1772.00 1993.00

Notes

CSA standard B-51 certified. Inspected and tested by the Technical Standards and Safety Authority of Canada.

PROJECT	
CUSTOMER	
ENGINEER	
REPRESENTATIVE	
DRAWING #	

FLEX-HOSE CO. INC.
4560 Buckley Road
Liverpool, NY USA 13088-2509
315/437-1611 • Fax 315/437-1903
www.flexhose.com • 1.877.METAL EJ