FLEXPRESS™ FP-D/300 Externally Pressurized Guided Expansion Joints

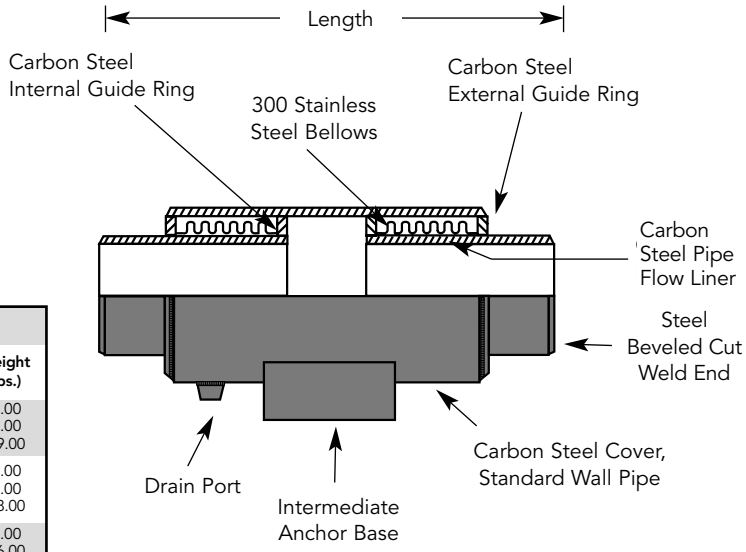

Maximum Temperature 650°F

Qty	I.D. (In.)	Bellows Area (Sq. In.)	Length (In.)	Movement Capability (In.) Compression	Movement Capability (In.) Extension	Weight (Lbs.)
	Design Pressure 300 PSIG • Test Pressure 450 PSIG					
	2.00	12	39.50 57.25 71.50	8.00 12.00 16.00	1.50 2.25 3.00	62.00 89.00 109.00
	2.50	12	39.50 57.25 71.50	8.00 12.00 16.00	1.50 2.25 3.00	67.00 97.00 118.00
	3.00	16	37.50 50.25 67.50	8.00 12.00 16.00	1.50 2.25 3.00	82.00 106.00 146.00
	4.00	30	38.75 52.00 70.00	8.00 12.00 16.00	1.50 2.25 3.00	133.00 171.00 231.00
	5.00	42	36.00 48.00 60.50	8.00 12.00 16.00	1.50 2.25 3.00	174.00 220.00 266.00
	6.00	53	36.25 48.25 60.75	8.00 12.00 16.00	1.50 2.25 3.00	192.00 240.00 290.00
	8.00	83	38.25 51.25 64.75	8.00 12.00 16.00	1.50 2.25 3.00	294.00 376.00 458.00
	10.00	135	40.50 54.75 73.25	8.00 12.00 16.00	2.00 3.00 4.00	378.00 489.00 654.00
	12.00	182	42.75 57.75 77.25	8.00 12.00 16.00	2.00 3.00 4.00	511.00 651.00 855.00
	14.00	212	42.75 57.75 77.25	8.00 12.00 16.00	2.00 3.00 4.00	673.00 863.00 1141.00
	16.00	276	42.75 57.75 77.25	8.00 12.00 16.00	2.00 3.00 4.00	750.00 964.00 1274.00
	18.00	338	42.75 57.75 77.25	8.00 12.00 16.00	2.00 3.00 4.00	832.00 1068.00 1412.00
	20.00	404	42.75 57.75 77.25	8.00 12.00 16.00	2.00 3.00 4.00	1016.00 1274.00 1652.00
	22.00	481	42.75 57.75 77.25	8.00 12.00 16.00	2.00 3.00 4.00	998.00 1278.00 1690.00
	24.00	562	42.75 57.75 77.25	8.00 12.00 16.00	2.00 3.00 4.00	1078.00 1382.00 1826.00

Notes

CSA standard B-51 certified. Inspected and tested by the Technical Standards and Safety Authority of Canada.

PROJECT	
CUSTOMER	
ENGINEER	
REPRESENTATIVE	
DRAWING #	

FLEX-HOSE CO. INC.
4560 Buckley Road
Liverpool, NY USA 13088-2509
315/437-1611 • Fax 315/437-1903
www.flexhose.com • 1.877.METAL EJ